USER MANUAL
ПОСІБНИК КОРИСТУВАЧА
РУКОВОДСТВО ПОЛЬЗОВАТЕЛЯ

MultiPRO-250
MultiPRO-270-400V

PATON INTERNATIONAL

CONTENTS

Connection to power line/power panel (at 25°C):

WARNING! Consider wires in walls and other extensions

Electrode to be used in MMA mode	Set current value for MMA and TIG	Wire cross-section diameter at MIG/MAG	Mains wire crosssection, mm²	Maximum wire length, m
1 x 220V/230V – MultiPRO-250				
Ø2 mm	max 80A	max Ø0.6 mm	1.0	75
			1.5	115
			2	155
			2.5	195
			4	310
Ø3 mm	max 120A	max Ø0.8 mm	1.5	75
			2	105
			2.5	130
			4	205
			6	310
Ø4 mm	max 160A	max Ø1.0 mm	2	75
			2.5	95
			4	155
			6	230
Ø5 mm fusible	max 200A		2.5	75
			4	125
			6	185
Ø5 mm Ø6 mm fusible	up to 250A	up to Ø1.2 mm	2.5	60
			4	100
			6	150
3 x 380V/400V – MultiPRO-270-400V				
Ø2 mm	max 80A	max Ø0.6 mm	1.0	135
			1.5	205
			2	270
			2.5	340
			4	540
Ø3 mm	max 120A	max Ø0.8 mm	1.5	135
			2	175
			2.5	220
			4	350
			6	525
Ø4 mm	max 160A	max Ø1.0 mm	2	130
			2.5	160
			4	260

			6	385
Ø5 mm.	max 220A		2.5	115
			4	180
			6	270
Ø6 mm fusible	up to 270A	max Ø1.2 mm	2.5	85
			4	135
			6	205

1. GENERAL PROVISIONS

PATON MultiPRO-250/270-400V inverter multifunction machines are designed for manual arc welding (MMA), argon arc welding (TIG) and semi-automatic welding (MIG/MAG) with safety gases and mixtures at direct current. The advantage of using a fully digital control method in this machine is the lack of disadvantages inherent in multifunction systems made from analog control systems, which, by definition, are always customized for a particular mode, and all other modes as additional have control disadvantages. In a fully digital system, the control board has absolutely all the resources within its full capacity and no matter what mode it is used in. This MultiPRO series is designed for industrial use. The source can be separated from the wire feeder both for ease of use and in safety cases, and through additional adjustments. The inverter rectifier can be adjusted to the most optimal setting in various situations. It provides virtually uninterrupted load duration at the rated current, which is sufficient for operation with any electrodes from Ø1.6 mm up to fusible Ø6 mm and for semi-automatic welding with solid wire of diameter from Ø0.6 mm to Ø1.2 mm. The source is initially set to optimum values for most applications and is simple enough, if you don't go into the intricacies of additional settings that already require a lot of skill from the welder. For hazardous working conditions, there is a built-in no-load voltage reduction unit in the MMA mode, with the possibility to switch it on and off. A distinctive feature of PATON semi-automatic machines is a very powerful, high-quality 4-roller and sealed metal wire feeder, with all leading rollers, as well as the availability of the KZ-2 EURO type connector, which has become a standard in the world, allowing the user to later change the torches at his discretion.

The machines are equipped with all the necessary accessories for comfortable operation in the modes of MMA manual arc welding, TIG argon arc welding and MIG/MAG semi-automatic welding with safety gases and mixtures at direct current.

The MultiPRO models from PATON have a built-in undervoltage protection, as well as short-term overvoltage protection.

The unit saves all current settings at the time of shutdown and restores them when the unit is switched on.

The machine stores up to 16 individual user settings (programs) under its own number in each welding mode. **Main advantages:**

1. Wide possibilities of adjusting welding parameters:
   a) in MMA mode – 1 (basic) + 7 (additional) + 3 (for pulse mode)
   b) in TIG mode – 1 (basic) + 7 (additional) + 3 (for pulse mode)
   c) in MIG/MAG mode – 2 (basic) + 6 (additional) + 3 (for pulse mode)
2. The availability of adjustable pulse mode in all types of welding;
3. In addition to surge protection, a system is installed to stabilize operation during **large, long-lasting** voltage fluctuations in the single-phase supply from 160V to 260V (for the MultiPRO-250) and from 320V to 440V (for the MultiPRO-270-400V);
4. Adapted to the standard household power network. Due to the high efficiency, the source provides **half the power consumption** compared to traditional sources;
5. Adaptive fan speed, i.e. it increases when the unit is hot and slows down when it is cold. It saves fan life and reduces dust in the unit;
6. The convenience of work thanks to the long loading duration (LD) on the **rated current**, which allows to weld practically **continuously** by electrodes on the rated current at 25°C;
7. Increased reliability of the unit in dusty production conditions, as the source microelectronics is placed in a separate compartment;
8. A **thermal electronic protection system** is installed on all heating elements of the source**;**

9. All electronics in the unit are impregnated with **two layers** of high-quality varnish, which ensures the reliability of the product during its entire service life;
10. Improved excitation and stability of the arc combustion, which virtually eliminates electrode sticking;
11. When the source is separated from the feeder unit, it provides small dimensions and mobility, which makes it easy to weld in hard-to-reach places.

PARAMETERS	MultiPRO-250	MultiPRO-270-400V
Rated supply mains voltage 50Hz, V	220 230	3x380 3x400
Rated input current from mains, A	29.6 ... 35.1	12.1 ... 14.1
Rated welding current, A	250	270
Maximum operating current, A	335	350
Load duration (LD)	70%/at 250A	70%/at 270A
	100%/at 208A	100%/at 225A
Voltage variation limits of mains voltage, V	160 – 260	±15%
Control range of welding current, A	12 – 250	12 – 270
Control range of welding voltage, V	12 – 28	12 – 29
Stick electrode diameter, mm	1.6 – 6.0	1.6 – 6.0
Welding wire diameter, mm	0.6 – 1.2	0.6 – 1.2
Maximum weight of the coil, kg	15	15
Pulsed welding modes	MMA: 0.2...500 Hz TIG: 0.2...500 Hz MIG/MAG: 5...500 Hz	
Non-contact ignition unit (oscillator) in TIG mode	Present	
Hot-Start in MMA mode	Adjustable	
Arc-Force in MMA mode	Adjustable	
Anti-Stick in MMA mode	Automatic	
No-load voltage reduction unit in MMA mode	on/off	
No-load voltage in MMA mode, V	12 / 75	
Arc ignition voltage, V	110	
Rated input power, kVA	6.6 ... 7.8	8.0 ... 9.4
Maximum input power, kVA	9.5	11.4
Efficiency, %	90	90
Cooling	Adaptive	
Operating temperature range	–25 ... +45°C	
Dimensions, mm (length, width, height)	360 x 260 x 270	540 x 360 x 400
Weight without coil and accessories, kg	14.1	16.5
Protection class*	IP21	IP33

Recommended length of power welding cables when welding:

Maximum current	Cable length (one way)	Crosssectional area	Cable brand
max160A	2...7 m	16 mm²	KG 1x16
max200A	3...9 m	25 mm²	KG 1x25
max250A	5...11 m	35 mm²	KG 1x35
up to 270A	5...10 m	35 mm²	KG 1x35

WARNING! The utility button on the back of the MultiPRO-250 is not a power button, so it does not completely power off all internal electronics when the machine is turned off. For this reason, as a safety precaution, disconnect the plug from the mains after you have finished welding.

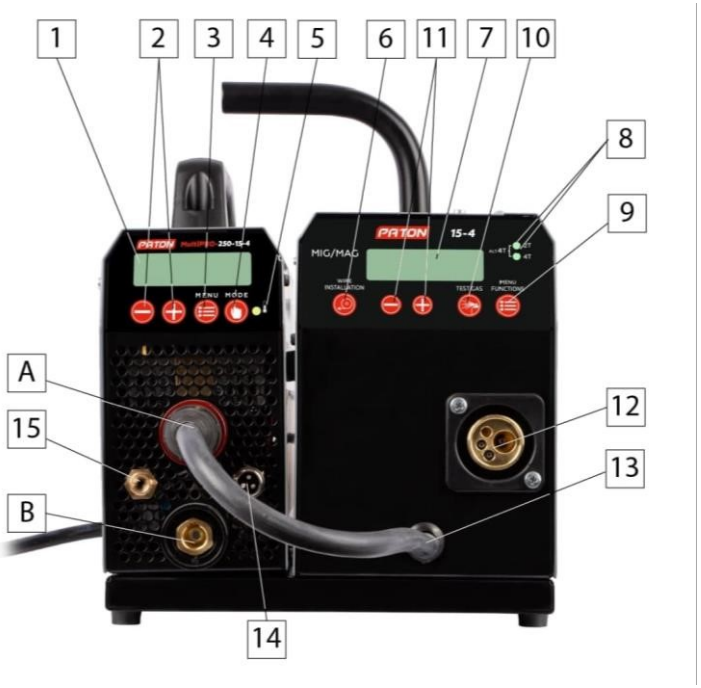
1
2
3
4
5
6
11
7
10
8
9
A
15
B
12
13
14
PATON
MultiPRO 250-15-4
MENU
MODE
PATON
15-4
MIG/MAG
WIRE INSTALLATION
TEST GAS
MENU FUNCTIONS
2T
4T

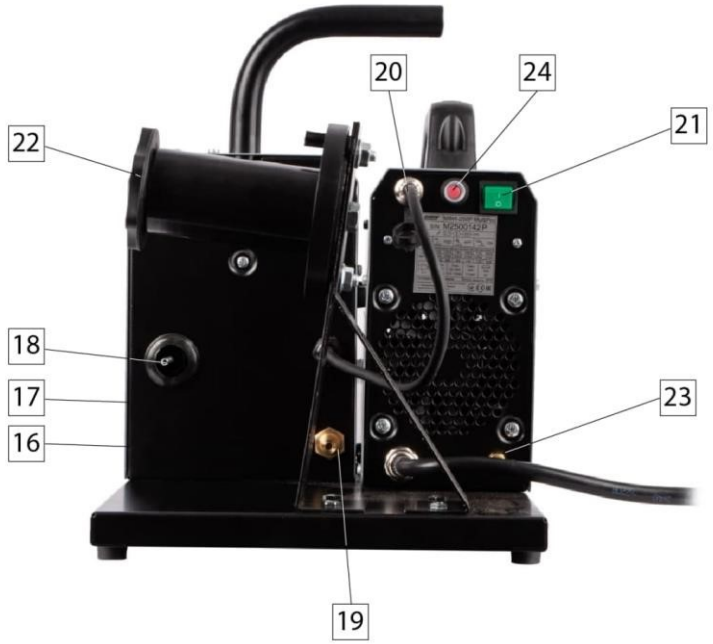
20
24
21
22
18
17
16
23
19

1 – Digital display;

2 – Buttons to adjust the selected parameter to decrease and increase (default: for MMA – welding current, for TIG – welding current, MIG/MAG – welding voltage);

3 – Button for selecting the source function in the current welding mode; **4** – Button for selecting the welding mode:

a) Manual arc welding with MMA stick electrode;

b) Argon welding with TIG non-fused electrode;

c) Semi-automatic welding in MIG/MAG safety gas;

5 – Machine overheat indicator: it does not light up usually, but it blinks when overheated;

6 – Wire-filling button (no gas supplied);

7 – Digital display of the wire feeder;

8 – Button mode indicators on the torch (2T/4T mode);

9 – Button for selecting functions of the wire feeder;

10 – Safety gas check button (no wire feed);

11 – Buttons for adjusting parameters to decrease and increase (default: wire feed speed);

12 – KZ-2 EURO type connector for semi-automatic torch connection;

13 – Power supply plug to the wire feeder;

14 – Control button connector on the torch for TIG welding;

15 – Socket for safety gas supply to the torch for TIG welding;

16 – Locking the protective cover;

17 – Lifting protective cover;

18– Welding wire filler inlet;

19 – Safety gas connection when using a semi-automatic torch;

20 – Control cable connection from the wire feeder;

21 – Source on/off button (decorative color);

22 – Wire coil holder with spring braking mechanism;

23 – Safety gas connection when using an argon torch;

24 – Wire feeder fuse is 5A;

A – Power socket "+" of bayonet type:

a) For MMA welding, the electrode cable is connected (in rarer cases, when special electrodes are used, the "ground" cable is connected);

b) For TIG welding, only the "ground" cable is connected;
c) In the case of semi-automatic MIG/MAG welding with **solid** wire, the cable to the feeder shall be connected;
d) In the case of semi-automatic MIG/MAG welding with **flux** wire, "ground" cable shall be connected;

B – Power socket "-" of bayonet type:

a) For MMA welding, ground cable is connected (in rarer cases, when special electrodes are used, the electrode cable is connected);
b) For TIG welding, only the argon torch is connected;
c) In the case of semi-automatic MIG/MAG welding with **solid** wire, the "ground" cable is connected;
d) In the case of semi-automatic MIG/MAG welding with **flux** wire, the cable is connected to the feeder.

2. COMMISSIONING

Warning! Before commissioning, please read the section "Safety instructions" in cl. 15.

2.1 INTENDED USE

The welding machine is designed exclusively for manual arc welding with a stick electrode, argon welding, and semi-automatic welding with safety gas.

Any other use is considered improper. The manufacturer is not liable for any damage caused by improper use.

Intended use is subject to the instructions in this operating manual.

2.2 PLACEMENT REQUIREMENTS

The welder can be placed and operated outdoors. The internal electrical parts of the unit are protected against direct exposure to humidity, but not against condensation droplets.

WARNING! Do not turn off the machine immediately after welding in hot weather or after intensive welding work in any weather! Allow the electronic components to cool down within 5 minutes.

WARNING! After using it in cold weather, after turning it off and then cooling down, condensation forms inside the unit, so it should not be turned on earlier than 3...4 hours!!!

Therefore, do not turn off the unit during cold weather if you plan to turn it on sooner than 4 hours later.

Place the machine so that there is unobstructed cooling air in and out through the air vents on the front and rear panels. Make sure that metal dust (e.g. from sanding) is not sucked directly into the machine by the cooling fan.

WARNING! The unit can be life-threatening after a hard fall. Install on a stable hard surface.

2.3 MAINS CONNECTION

The welding machine is designed as standard for:

1. 220V or 230V mains voltage for the MultiPRO-250 model;
2. Three-phase 3x380V or 3x400V (MultiPRO-270-400V model), for which three wires are provided. Safety regulations for working with welding equipment require grounding the unit's housing. There are two options for this: 1) using the fourth wire in the yellow-green mains cable (international marking standard); 2) using the bolt terminal on the rear of the machine (tougher grounding standard, used in CIS countries).

Warning! If the unit is connected to mains voltages above 270V (MultiPRO-250) or 450V (MultiPRO-270-400V), all manufacturer's warranty obligations will become void!

The manufacturer's warranty will also become null and void if the mains phase is incorrectly connected to the source ground.

The mains connector, the cross-sections of the power supply cables, as well as the mains fuses must be selected according to the technical data of the unit.

2.4 CONNECTION OF THE MAINS PLUG

The mains plug must be suitable for the supply voltage and current consumption of the welding machine (see technical data). For safety reasons, use power sockets with a **guaranteed** ground connection and **never use** the neutral wire of the mains for this purpose!

WARNING! The mains switch **21** is a signal button that blocks only the power current of the welding machine, but does not completely disconnect the internal

electronics of the machine. Therefore, as a safety precaution, remember to unplug completely when connecting.

3. MANUAL ARC WELDING WITH A STICK ELECTRODE (MMA)

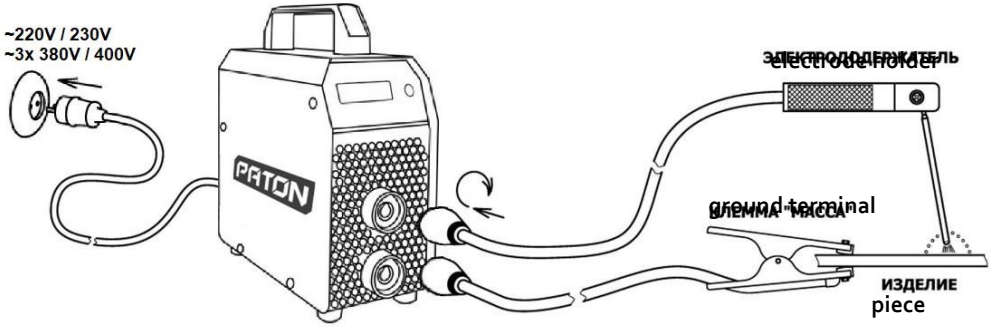

The wire feeder is not needed in this welding mode!
To prepare the source for operation:

- Insert the electrode cable into the source **A "+"** socket;
- Insert the "ground" cable into the source **B "-"** socket;
- Connect the "ground" cable to the piece;
- Connect the mains cable to the power supply;
- Turn the mains switch **21** on the rear panel to the "ON" position;
- Set the welding mode MMA with button **4**; the modes are switched in a circle;
- Set the current main parameter (the welding current) with button **2**;
- If necessary, you can adjust additional functions of the welding process, see paragraph 6.1

Warning! In the MMA welding mode, the stick electrode is energized after the mains switch has been switched to "I" position. Do not touch conductive or grounded objects such as the housing of the welding machine, etc. with the electrode, as the machine will perceive this situation as a signal to start the welding process.

3.1 WELDING PROCESS CYCLE - MMA

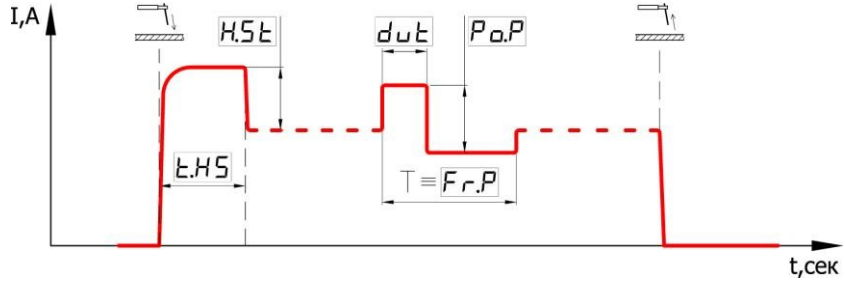

To change the value of any function, see cl. 6.1.

3.2 HOT-START FUNCTION Advantages:

- Improved ignition even with poorly ignited electrodes;
- Better weld penetration of the base material during ignition, hence, fewer lack of penetration;
- Prevention of slag inclusions;
- Manual adjustment: allows to set the function level to a minimum value, which greatly reduces the power consumption at the initial moment of ignition, thus allowing the source to start on line voltage values close to the minimum possible, but reducing the quality of the ignition moment (the device becomes similar to a transformer source, but in certain situations it is the only possible way). It is also possible to increase the function to the maximum value to improve the ignition

torque even more (when running from a good mains). But don't forget that the higher current of this function can burn the piece when welding thin metals, so we recommend reducing the "Hot Start" in this situation.

How it is achieved:

For a short time at arc ignition, the welding current is increased by the default setting of +40%.

Example: Welding with Φ3mm electrode the set basic welding current is 90A.

Result: The hot start current will be 90A + 40% = 126A.

In the advanced settings, you can change both the strength of the "Hot Start" [H.St] and the time of the "Hot Start" [t.HS]. Do not exceed the "Hot Start" force and time unnecessarily, because at high limit values it requires a very strong power supply, and in the absence of a good power supply, the ignition process will even be disrupted. To change the value of any function in the current welding mode, see section 6.1.

3.3 ARC-FORCE FUNCTION Advantages:

- Increased welding stability at short arc;
- Improved metal dripping into the weld pool;
- Improved arc ignition;
- Reduces the likelihood of electrode sticking, but this is not the "Anti-Stick" function, which we will talk about in the next paragraph;
- Manual setting: allows you to set the level of the function to a minimum value, which is insignificant, but reduces the energy consumption and the concentration of heat input when welding thin metals. It reduces the probability of burning through, but also reduces the stability of combustion in a short arc (the machine becomes similar to a transformer source). It is also possible to increase the function to the maximum value for even greater combustion stability in the short arc, but this requires a better power supply and increases the probability of burning through the piece.

How it is achieved:

If the arc voltage drops below the minimum allowable voltage for a stable arc, the welding current increases by the default level of +40%.

In the advanced settings, both the Arc Force [Ar.F] and the trigger level [u.AF] can be changed. Do not exceed the power and trigger level of the "Arc Force" unnecessarily, because it affects the operation of the "Anti-Stick" function at high

limit values, especially when welding with thin electrodes less than Φ 3.2 mm, which will be discussed in the next paragraph.

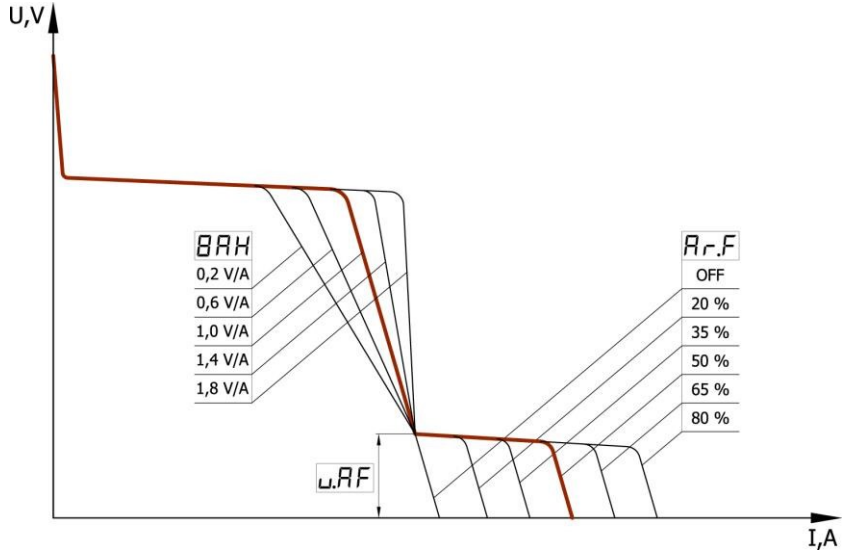

To change the value of any function in the current welding mode, see section 6.1.

3.4 ANTI-STICK FUNCTION

At the initial ignition of the arc, the electrode may stick and tack to the piece. This is prevented by many functions of the device, but it can still happen, which in turn leads to the first incandescence, and subsequently to the destruction of the electrode.

In such a situation, machine activates the built-in "Anti-Stick" function, which works constantly in the MMA mode and reduces the welding current after 0.6...0.8 seconds after detecting this condition. It also makes it easier for the welder to separate (tear off) the electrode from the piece without the risk of burning his eyes by accidentally igniting the arc. After separating the electrode from the piece, the welding process can continue unhindered.

3.5 SLOPE CONTROL FUNCTION OF THE VOLTAMMETRIC CHARACTERISTIC

This function is primarily designed for comfortable welding with different types of electrode coatings. By default, the slope of the voltammetric characteristic [BAH]

is set to 1.4V/A, which corresponds to the most common electrodes with rutile type of coating (ANO-21, MP-3). For more comfortable operation with electrodes with a basic type of coating (UONI-13/45, LKZ-70), it is not necessary, but it is recommended to set the slope [BAH] to 1.0V/A. In their turn, electrodes with cellulose type of coating (CC-1, VCZ-4A) even require setting the slope of voltage characteristic to 0.2...0.6V/A value and in this case sometimes it is necessary to raise the operation level of "Arc-Force" function [u.AF] up to the value of 18V. To change the value of any function in the current welding mode, see section 6.1.

3.6 SHORT ARC WELDING FUNCTION

This function is especially useful when welding ceiling seams, when it is necessary not to stretch the welding arc too much. For this purpose, the machine has an option to turn the "Short-Arc" function to the "ON" position. By default, it is in the "OFF" position. To change the value of any function in the current welding mode, see section 6.1.

3.7 NO-LOADING VOLTAGE REDUCTION UNIT FUNCTION

When welding in tanks, cisterns and places requiring an increased electrical safety system, the no-load voltage reduction function can be activated.

When the electrode is detached from the piece, after 0.1 second the voltage at the source terminals is reduced to a safe level below 12V.

This requires the no-load voltage reduction unit, which is present in this model of equipment, but is in the "OFF" position by default, i.e. turned off, since it is known that turning on any such function somewhat impairs arc ignition. To change the value of any function in the current welding mode, see section 6.1.

3.8 PULSED CURRENT WELDING FUNCTION

This function is designed to facilitate the control of the welding process in spatial positions other than bottom and in the welding of non-ferrous metals. The effect is directed to the mixing of the molten weld metal and to the drip transfer into the weld pool, and this in turn affects the stability of the weld formation and the welding process. In other words, this process to some extent replaces the movements of the welder's hand, which is especially important in hard-to-reach places. The shape and quality of the weld formation depends on the correct setting, which reduces the

likelihood of pores and reduces the granularity of the structure, and this increases the strength of the weld.

To implement this function, three parameters must be set in the unit: pulsing power [Po.P], pulsing frequency [Fr.P] and pulse/pause ratio (or "duty ratio") [dut]. By default, the pulsing power as a key parameter is in "OFF" position, i.e. the function is disabled, and the pulsing frequency and "duty ratio" are at the most common values of 5.0Hz and 50% respectively. To enable the function, it is sufficient to set the pulsing power greater than zero. This parameter is set as a percentage of the main welding current set.

Example: When welding with Φ3 mm electrode, the set main welding current is 60A and the pulsing power is 40%, with a pulsing frequency of 5.0Hz and a default "duty ratio" of 50%.

Result: The current will pulse from 36A to 84A with a frequency of 5Hz. The pulses will have the same shape in amplitude and time.

The "duty ratio" parameter is set to 50% by default. If you change this parameter from 50%, the asymmetry between the current pulse time and the current "pause" time is entered:

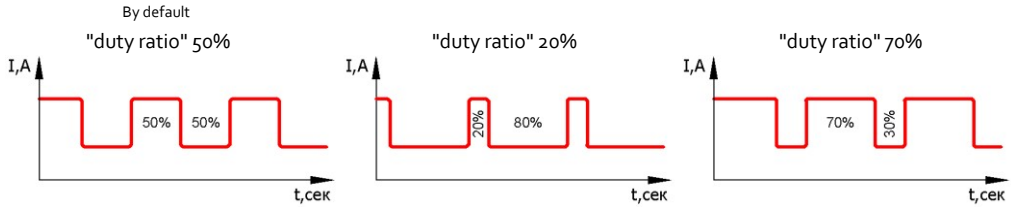

The machine will calculate that while maintaining the set pulse difference, the average welding current will be maintained at the main welding current of 60A (as set), respectively the heat input to the weld will be at the same 60A, but the stability of the welding process and the mixing of the weld pool will change. This is a very important condition for the user to accurately estimate the amount of change in weld pool heat input, for example: by comparing with another main current without pulse mode.

These parameters are set up differently in each situation, according to the requirements of the welder. To change the value of any function in the current welding mode, see section 6.1.

4. ARGON WELDING (TIG)

The wire feeder is not needed in this welding mode!

Warning! The default setting is TIG-2T welding cycle, see 4.2.1.

Warning! As a safety gas, pure argon "Ar" is used most often, sometimes helium "He" or their mixture in different proportions. DO NOT allow combustible gases! Other gases should only be used in agreement with the manufacturer.

Warning! Always use a water-cooled torch with continuous currents of more than 150A!

Warning! The tungsten electrode must be sharpened in the "needle" and a common mistake is to sharpen the electrode in the "tip", which allows the arc to "wiggle" from side to side. The correct sharpening is a slightly blunted spout and the smaller the "heel" that can withstand the set current, the better it is. Remember that at high welding currents a much sharpened electrode is easily melted because of the low heat transfer. Also the "risks" from sharpening should be located along the axis of the electrode.

4.1.1 WELDING PROCESS CYCLE - TIG-LIFT

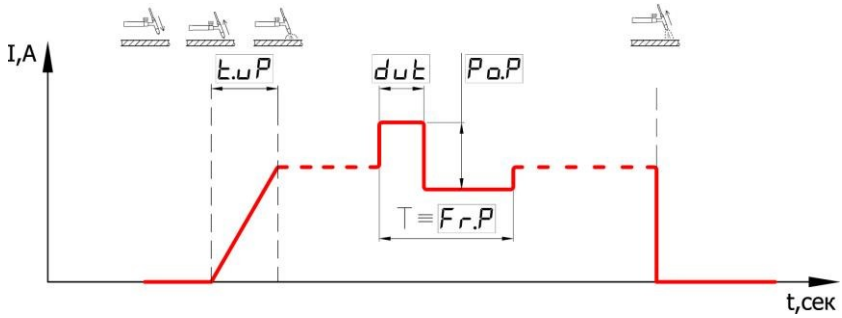

To change the value of any function, see cl. 6.1.

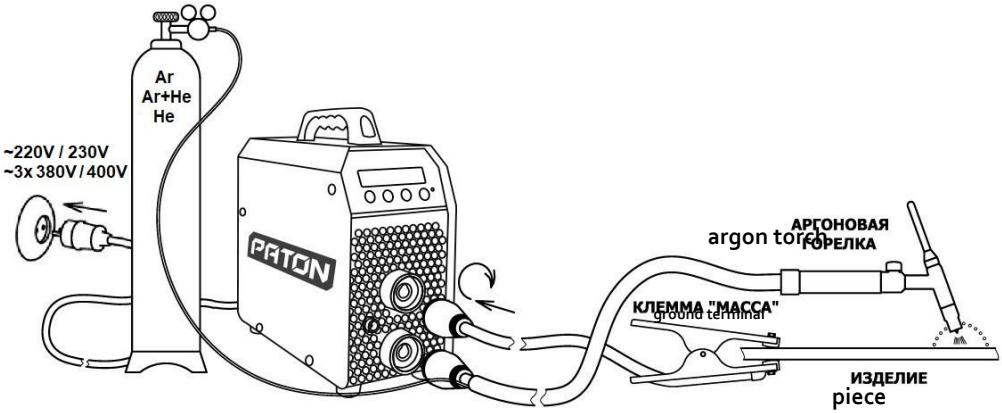

The procedure to prepare the machine for operation:

- **This mode does not require disconnecting the cable from the wire feeder;**
- Insert the torch cable into the source **B "-"** socket;;
- Insert the "ground" cable into the source **A "+"** socket;
- Connect the "ground" cable to the piece;
- Install the reducer on the gas cylinder;
- Connect the gas hose of the torch to the reducer of the gas cylinder;
- Open the valve of the gas cylinder, check the tightness;
- Connect the mains cable to the power supply;
- Turn the mains switch **21** on the rear panel to the "ON" position;
- Set the welding mode TIG with button 4. The modes are switched in a circle;
- Set the current main parameter (the welding current) with button **2**;

-

If necessary, you can adjust additional functions of the welding process, see paragraph 6.1.

Warning! The argon torch must be of the valve type, with a Ø13mm bayonet connector. Choose the maximum current of the torch according to your working requirements.

4.1.2 TIG-LIFT ARC IGNITION FUNCTION

Warning!!! It requires cleaning the piece at the arc ignition point.

This button function on the torch is the default in this model and is designed for torches with contact arc ignition, without the use of oscillators or similar devices, but unlike the classic method, it completely eliminates the shock current at the moment of ignition. This function greatly reduces the destruction and penetration of the non-consumable tungsten electrode into the weld, which is a very negative phenomenon.

Warning! The valve on the torch must be opened independently before welding and closed after the process is complete.

The way to use this function is to touch the electrode to the piece. You can hold the electrode in this position indefinitely, and when the user considers it ready to start welding (for example, when the protective mask is on the eyes and the place is well purged with safety gas), it is just necessary to start SLOWLY raising the tip of the sharpened electrode from the piece. The machine will detect this moment and will take it as a signal to start the welding process, thereby it will begin to increase the welding current to the set value. The higher the main operating current, the faster you need to raise the electrode, otherwise it will melt. If you do not get it right away and, for example, the tungsten electrode sticks when you try to raise it, you need to start all over again and at the next attempt to slightly increase the rate of rising. If there was no attempt to ignite the electrode at all with a small flash, then it is necessary to slightly decrease the lifting speed at the next approach. For error-free ignition, you need some time to get used to it. We will consider the time of smooth current rise [t.uP] up to the set value in the next paragraph.

4.2.1 WELDING PROCESS CYCLE - TIG-2T

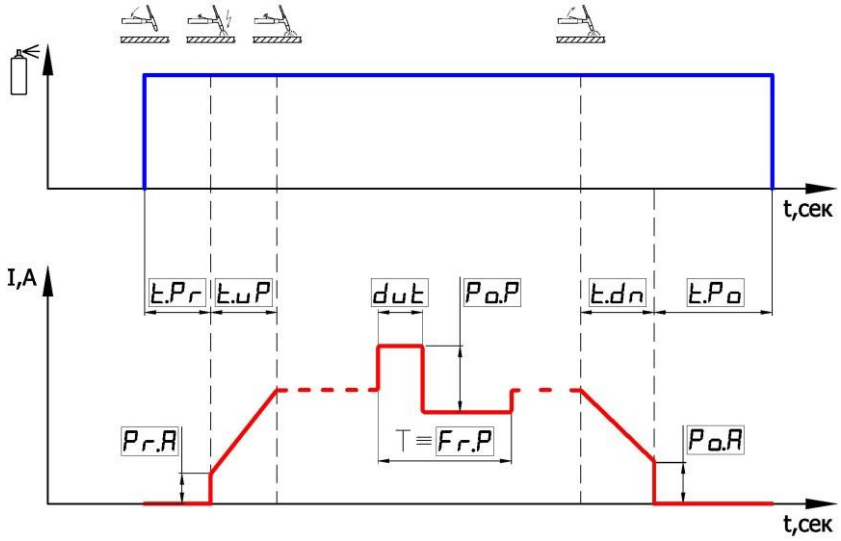

To change the value of any function, see cl. 6.1.

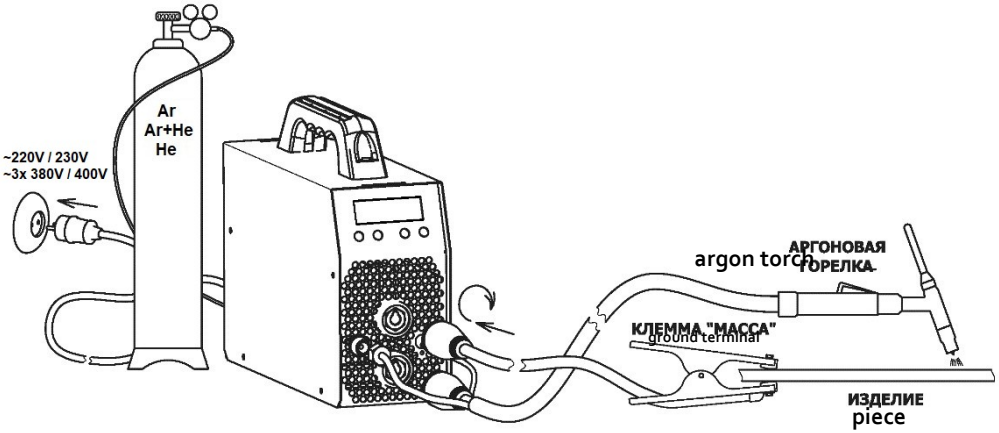

The procedure to prepare the machine for operation: -

disconnect ALL cables from the wire feeder;

- Insert the torch cable into the source **B "-"** socket;
- Screw the gas connector from the argon torch to the socket **15** tightly;
- Insert the connector of the torch control button into the socket **14**;

-
- Insert the "ground" cable into the socket **A "+";**
- Connect the "ground" cable to the piece;
- Install the reducer on the gas cylinder;
- Connect the gas hose to the gas cylinder reducer and connector **23** on the rear panel of the source;
  Open the valve of the gas cylinder, check the tightness;
- Connect the mains plug to the power supply;
- Turn the mains switch **21** on the rear panel to "I" position;
- Set the TIG welding mode with button **4**. The modes are switched in a circle;
- Set the function of the torch button TIG-2T, if the function menu is not locked (see item 6.1). To do this, press button **3** until "button mode" is displayed. The current position of this function will be indicated next to it. Set "2T" with buttons **2**. If you do not take any action for a long time, the unit will exit this function. Return in the same way, if you have skipped the required button mode. Press button **3** again and the functions are switched in a circle;
- After the machine exits to the main parameter, use buttons **2** to set the welding current;
- If necessary, additional welding process functions can be adjusted. See section 6.1 for the procedure.

Warning! The argon torch must be of the button type, with a *Φ*13mm bayonet connector. Choose the maximum current of the torch according to your working requirements. It is included in the package.

4.2.2 BUTTON FUNCTION ON THE TORCH TIG-2T

When the torch button is pressed, the control signal is sent to the control unit, which performs the pre-purge function of the welding zone (turns on the gas valve) and sends a delayed signal to turn on the source. At the same time, a highfrequency high-voltage pulse is sent to ignite the arc. All other functions are executed (we will discuss them in detail in the following paragraphs) according to the welding cycle above. When the button is released, the soft decay function is activated and the power supply is turned off. After that, the post-purge function of the welding zone is activated (the gas valve is turned off with a delay).

4.3.1 WELDING PROCESS CYCLE - TIG-4T

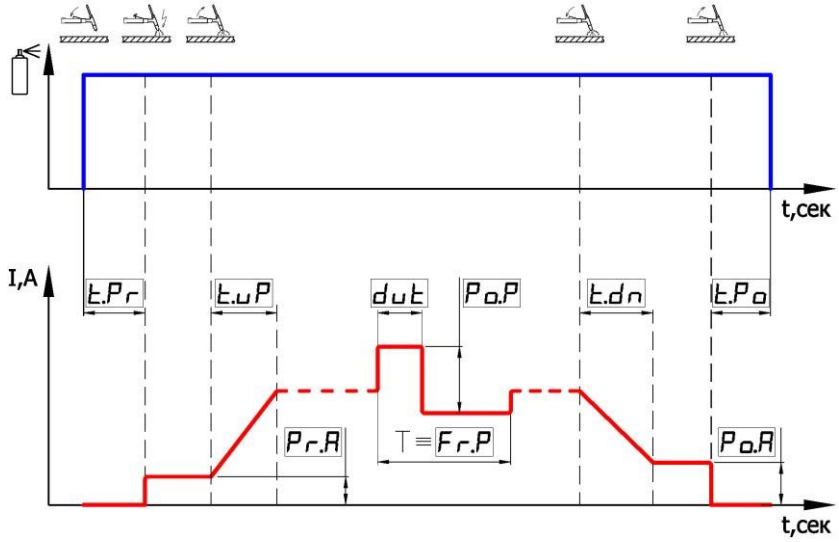

To change the value of any function, see cl. 6.1.

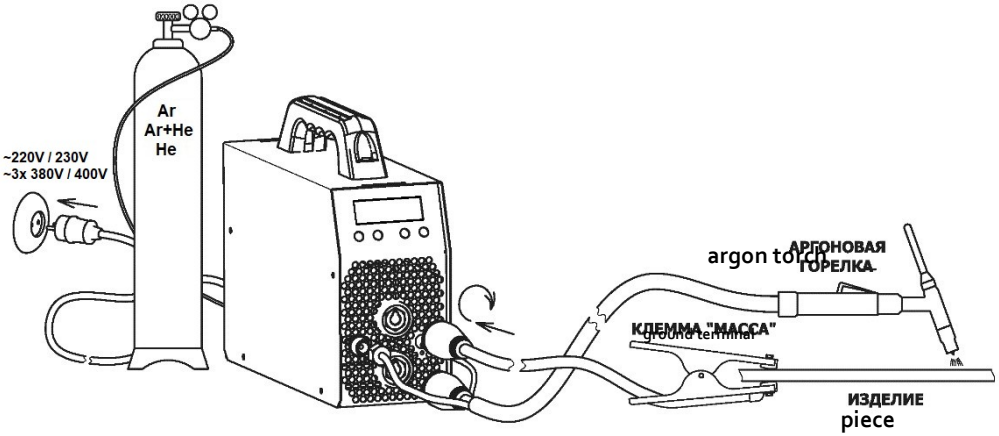

-

The procedure to prepare the machine for operation: -

disconnect ALL cables from the wire feeder;

- Insert the torch cable into the source **B "-"** socket;
- Screw the gas connector from the argon torch to the socket **15** tightly;
- Insert the connector of the torch control button into the socket **14**;
- Insert the "ground" cable into the socket A "+";
- Connect the "ground" cable to the piece;
- Install the reducer on the gas cylinder;
- Connect the gas hose to the gas cylinder reducer and connector **23** on the rear panel of the source;
  Open the valve of the gas cylinder, check the tightness;
- Connect the mains plug to the power supply;
- Turn the mains switch **21** on the rear panel to "ON" position
- Press button **4** to set the TIG welding mode. Hold it for about 5 seconds. The indicator will start blinking, informing the user that it is ready to switch to the next welding mode. If you have skipped the desired welding mode, press button **4** again. The modes are switched in a circle;
- Set the function of the torch button TIG-4T. To do this, press button 3 until "button mode" is displayed. The current position of this function will be indicated next to it. Set "4T" with buttons 2. If you do not take any action for a long time, the unit will exit this function. Return in the same way, if you have skipped the required button mode. Press button 3 again and the functions are switched in a circle;
- Set the current main parameter (the welding current) with button **2**;
- If necessary, additional welding process functions can be adjusted. See section 6.1 for the procedure.

Warning! The argon torch must be of the button type, with a *Φ*13mm bayonet connector. Choose the maximum current of the torch according to your working requirements. It is included in the package.

4.3.2 BUTTON FUNCTION ON THE TORCH TIG-4T

The control button on the torch is handled similarly to the TIG-2T (see paragraph 4.2.2), but there is a difference. The first is at the beginning of welding. As long as the button is held during the first press, after pre-purging the welding zone with gas and high-voltage ignition, the output of the source will be constantly

pre-current (standby arc)/ Only after releasing the button, the process of current rising will start, and the source will reach the operating current, that is the button should not be held during the operating current. The hand will be less strained during a long welding process. The second difference at the end of welding is that after the second push of the control button on the torch, the current starts to decrease to the crater welding current and while the button is held, the current is at this level of the crater welding current. After the second release of the button, the source is switched off, and the oscillator unit must work out its function after purging the welding area with gas (the gas valve is switched off with a delay).

4.4 PRE-PURGE FUNCTION WITH SAFETY GAS

This function is necessary to protect the welding area from the harmful effects of atmospheric air and is to pre-purge the welding area with safety gas before igniting the welding arc. By default, the pre-purge time [t.Pr] is set to 0.1 sec, which can be changed at any time at your discretion. To change the value of any function in the current welding mode, see section 6.1.

4.5 POST-PURGE FUNCTION WITH SAFETY GAS

This function consists in subsequent purging of the welding zone with safety gas after the arc goes out, because the red-hot weld pool is still exposed to the harmful effects of atmospheric air for some time. By default, the post-purge time [t.Po] is set to 1.5 seconds, which can be changed at any time at your discretion. To change the value of any function in the current welding mode, see section 6.1.

4.6 PRE-CURRENT FUNCTION (PILOT ARC)

This feature is necessary for easy use of the torch when the arc is ignited. It allows you to start the welding process with low current values, which only support the process, but does not introduce a serious heat input or burn through the piece. You can preheat the weld spot in the case of the TIG-4T button mode. By default, the preheat current [Pr.A] is set to 20A. To change the value of any function in the current welding mode, see section 6.1.

4.7 WELDING CURRENT RAMP FUNCTION

This function, in addition to saving the electrode life and, to some extent, the torch itself, is also necessary for easy use of the torch. It eliminates the formation of the initial splashing of the weld pool, as well as for the set time of smooth current ramp [t.uP]. In case of the TIG-2T button mode, it is possible to precisely point the

-

torch to the desired welding spot, since the arc ignition point in particularly critical products is not always at the welding spot, or even with this function you can preheat the welding spot. The default setting is "OFF", which is disabled. To change the value of any function in the current welding mode, see section 6.1.

4.8 WELDING CURRENT DECAY FUNCTION

This function is necessary to improve the process of welding a crater formed under the pressure of the main working current of the welding arc. This crater is the origin of defects in the weld, and it is an extremely negative phenomenon. Therefore, it is possible to weld the formed crater during the set time of smooth current decay [t.dn]. The default setting is "OFF", which is disabled. To change the value of any function in the current welding mode, see section 6.1.

4.9 CRATER WELDING CURRENT FUNCTION

This function is necessary to indicate the level to which the current decreases at the end of the welding process. It is necessary to perform crater welding in case of TIG-4T button mode (when holding the button on the torch for the second time). By default, the crater welding current [Po.A] is set to 20A. To change the value of any function in the current welding mode, see section 6.1.

4.10 PULSED CURRENT WELDING FUNCTION

This function is designed to facilitate the control of the welding process in spatial positions other than bottom and in the welding of non-ferrous metals. The effect is directed to the mixing of the molten weld metal and to the drip transfer into the weld pool, and this in turn affects the stability of the weld formation and the welding process. In other words, this process to some extent replaces the movements of the welder's hand, which is especially important in hard-to-reach places. The shape and quality of the weld formation depends on the correct setting, which reduces the likelihood of pores and reduces the granularity of the structure, and this increases the strength of the weld.

To implement this function, three parameters must be set in the unit: pulsing power [Po.P], pulsing frequency [Fr.P] and pulse/pause ratio (or "duty ratio") [dut]. By default, the pulsing power as a key parameter is in "OFF" position, i.e. the function is disabled, and the pulsing frequency and "duty ratio" are at the most common values of 10.0Hz and 50% respectively. To enable the function, it is sufficient to set the pulsing power greater than zero. This parameter is set as a percentage of the main welding current set.

Example: when welding with a 2mm non-consumable tungsten electrode, the set main welding current is 100A and the pulsing power is 30%, with a pulsing frequency of 10.0Hz and a default "duty ratio" of 50%.

Result: The current will pulse from 70A to 130A with a frequency of 10Hz. The pulses will have the same shape in amplitude as in time.

The "duty ratio" parameter is set to 50% by default. If you change this value, it introduces an asymmetry between the current pulse time and the current "pause" time: default

"duty ratio" 50% "duty ratio" 20% "duty ratio" 70%

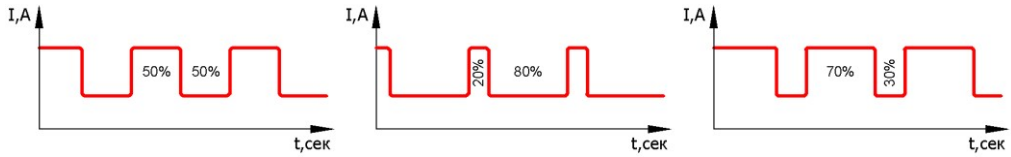

The machine will calculate that while maintaining the set pulse difference, the average welding current will be maintained at the main welding current of 100A (as set), respectively the heat input to the weld will be the same as 100A, but the stability of the welding process and the mixing of the weld pool will change. This is a very important condition for the user to accurately estimate the amount of change in the weld pool's heat input, for example: by comparing it to another main current without pulse mode.

These parameters are set up differently in each situation, according to the requirements of the welder. To change the value of any function in the current welding mode, see section 6.1.

5. SEMI-AUTOMATIC WELDING (MIG/MAG)

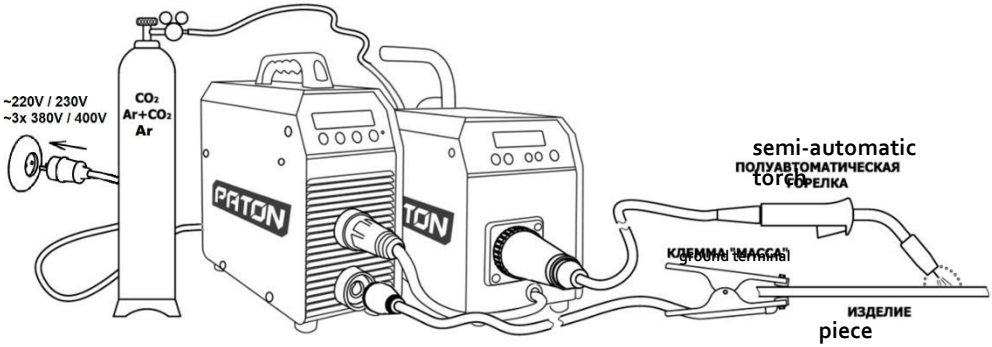

Warning! Carbon dioxide "CO_2" is used as safety gas when welding ferrous metals in the simplest case, and when welding aluminum, only inert gases such as argon "Ar", sometimes expensive helium "He", as an alternative for stainless and highalloy steels mixtures in different proportions "80%Ar+20%CO_2" are often used. The use of other gases must be coordinated with the manufacturer of the equipment.

Warning! Since the machine uses a standard KZ-2 EURO type connector for the torch, you can subsequently purchase a torch of your choice. It is included in the package.

Preparation for welding with **solid** wire:

- Install the source on the base of the wire feeder for better rigidity embrace and tighten the belt around the source and the base (through the slots on the sides of the source). The strap is supplied in the kit;
- Connect the control cable from the wire feeder to socket **20** on the rear panel of the source;
- Plug the "ground" cable into the source **B "-"** socket;
- Connect the "ground" cable to the piece;
- Connect the power plug **13** of the wire feeder to the source **A "+"** socket;
- Connect and screw the semi-automatic welding torch to the socket **12** on the wire feeder until it **stops**;
- Install the reducer on the gas cylinder with safety gas "CO_2", "Ar+CO_2" or "Ar";
- Connect the gas hose to the gas cylinder reducer and socket **19** on the rear panel of the wire feeder;
- Open gas cylinder tap, check tightness;
- Connect power cord of the source to the power supply;
- Turn the power switch **21** on the rear panel of the source to the "ON" position;
- Use button **4** to set the welding mode MIG/MAG. The modes are switched in a circle;
- Set the required welding voltage with the button **2**;
- Set the wire coil of the required diameter;
- Lift up the beam on the pressure roller;
- Lead the loose end of the wire through the input channel **18** into the welding torch;
- Lower and clamp the welding wire between the rollers. The tension of the rollers is written on the plastic handle. If there is no experience, then initially set to the middle position (about 3);
- Use buttons **11** to set the required wire feed speed;
- Use button **6** to feed the wire through the whole channel and adjust the final tension of the rollers according to the recommendations for semi-automatic welding, paying special attention to the tension of the coil brake. The coil must be MINIMALLY clamped and easily rotated, but spontaneous unrolling must not be observed. WARNING: If the coil brake mechanism is not assembled correctly, it may "self-tighten" when the coil rotates, which after a short time will lead to complete blockage of the wire and disrupt the welding process. So please double-check this point before the first filling of the wire;
- If necessary, it is possible to adjust additional welding process functions on the welding source and wire feeder. See section 6.1.

Do not forget about the safety gas supply. To check its availability in the channel of the torch, there is a button 10. When you press it, the wire is not fed. If you are a beginner and have no experience in setting the optimal pressure for welding a particular product, then at the first moment the gas pressure can be set higher than the optimal value of ~0.2 MPa. This will have little effect on the process, only the consumption of safety gas will increase. However, to save money in the future, follow the general recommendations for welding works with semiautomatic machines. Just start with the average wire feed speed (~4.0 ... 5.0 m/min) and the average voltage at the source (~19V) at any diameter of the installed wire (Φ0.6...1.2 mm). It may not be optimal, but the unit should already be welding. To get the best result, you need to adjust the voltage of the source with buttons **2** and the wire feed speed with buttons **11** on the feeder according to the general recommendations on the welding process with semi-automatic machines. Remember, these parameters are different for each case.

5.1.1 WELDING PROCESS CYCLE - MIG/MAG - 2T

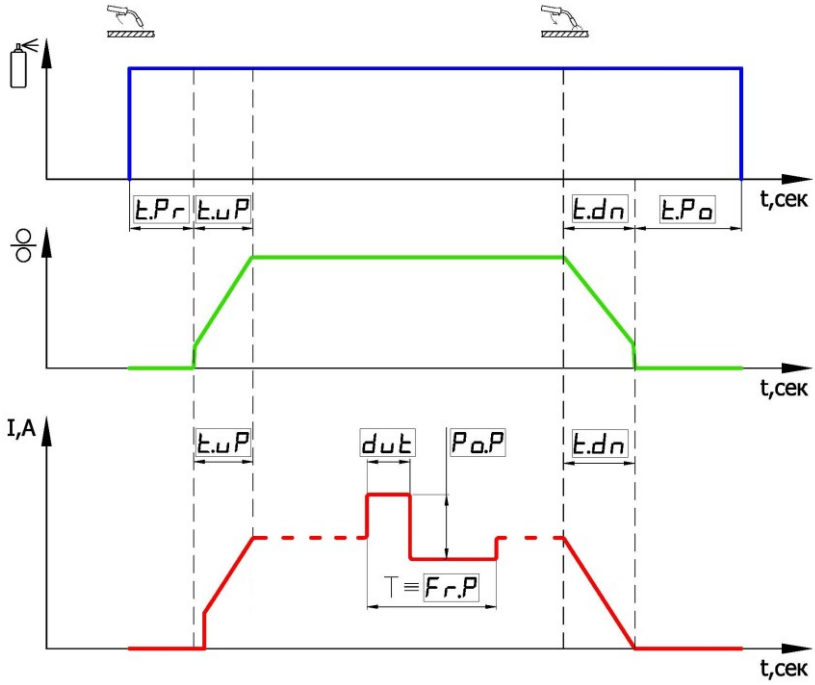

To change the value of any function, see cl. 6.1.

5.1.2 BUTTON FUNCTION ON THE TORCH - 2T

It is used when welding short and medium length welds. The function is as follows: when you press the button on the torch, the control signal goes to the control unit. The function of pre-purging the welding zone with gas for time [t.Pr] is activated (gas valve opens), then the signal to turn on the source and the wire feeder motor is sent. From that moment, the welding process starts, at the same time the function of gradual entering the welding mode for the time [t.uP], as well as additional functions can be executed (for example, pulse mode, which we will consider in detail in the following paragraphs). All this is done according to the welding process cycle given in the cyclogram of paragraph 5.1. After releasing the button, the function of gradual decay of current and wire feed speed for time [t.dn] is executed, then the source is turned off. Then the post-purging function of the welding zone with gas is executed for the time [t.Po] (the gas valve is closed with a delay).

5.2.1 WELDING PROCESS CYCLE - MIG/MAG - 4T

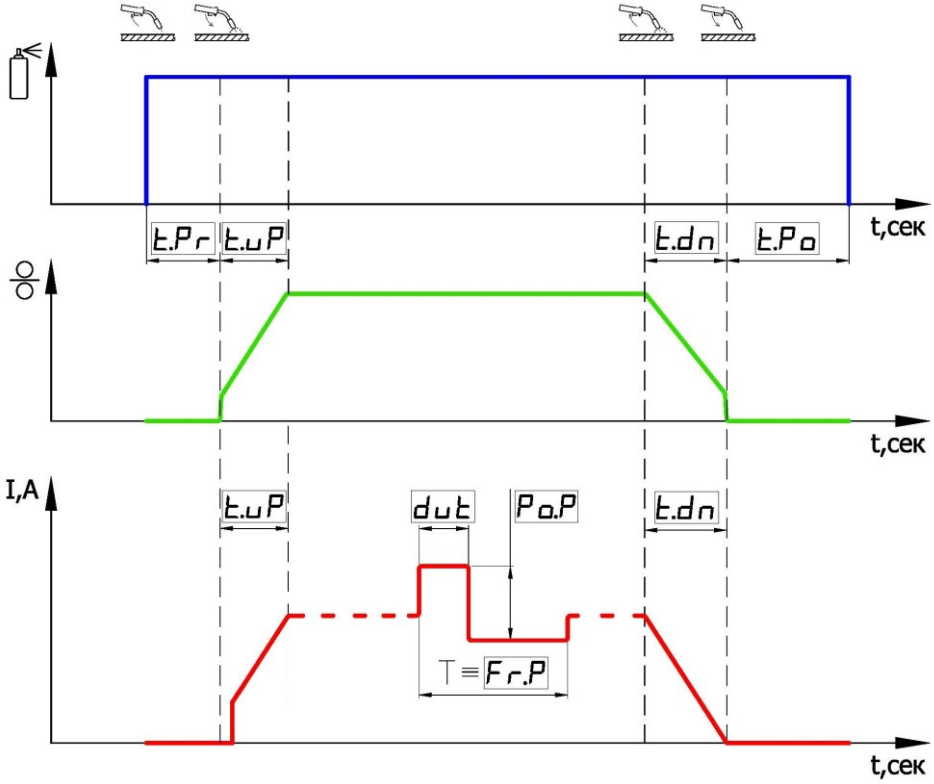

To change the value of any function, see cl. 6.1.

5.2.2 BUTTON FUNCTION ON THE TORCH - 4T and alt. 4T

a) World standard button mode – 4T

b) Alternative button mode – alt. 4T

It is used when welding long welds. The function is as follows: when you **first press** the button on the torch, the control signal goes to the control unit. The function of pre-purging the welding area with gas (gas valve opens) is activated. After **the first release** of the button, the signal to turn on the source and the wire feeder motor is sent. From that moment, the welding process starts, at the same time the function of gradual entering the welding mode for the time [t.uP], as well as additional functions can be executed (for example, pulse mode, which we will consider in detail in the following paragraphs). All this is done according to the welding process cycle

given in the cyclogram of paragraph 5.2. After **the second pressing** of the button on the torch, the function of gradual decay of voltage and wire feeding speed for the time [t.dn] is executed, then the source is turned off. After **the second release** of the button, the post-purging function of the welding zone is activated for the time [t.Po] (the gas valve closes with a delay).

In the alternative button mode alt.4T, it skips the second cycle (the first button release). This differs from the world standard 4T. To explain, the system does not wait for **the first release** of the button on the torch, but immediately after the prepurging function of the welding zone with gas in time [t.Pr], it starts the arc ignition process. It is similar to the 2T button mode. The welding process continues unchanged after **the first release**. This mode is provided by PATON as a bonus mode. Use it only by request, as it is more familiar in terms of more frequent use of 2T mode customers in classic semi-automatic machines, respectively is more intuitive.

5.3 INDUCTANCE FUNCTION

This feature is required to change the rate of current ramp up as the arc voltage changes. The result is fewer spatters, but it affects the dripping process, resulting in a slower welding process at high levels of inductance and a strong decrease in drip transfer rate. By changing the value of this function, it is possible for each user to choose the optimal welding process for him. Generally, the minimum values are used for welding thicknesses over 3 mm and the maximum values for thinner pieces.

By default, the inductance is set to "OFF", i.e. set to zero steps. To change the value of any function in the current welding mode, see section 6.1.

5.4 PRE-PURGE FUNCTION WITH SAFETY GAS

This function is necessary to protect the welding area from the harmful effects of atmospheric air and is to pre-purge the welding area with safety gas before igniting the welding arc. By default, the pre-purge time [t.Pr] is set to 0.1 sec, which can be changed at any time at your discretion. To change the value of any function in the current welding mode, see section 6.1. You can use the left source indicator and the right wire feeder indicator.

5.5 POST-PURGE FUNCTION WITH SAFETY GAS

This function consists in subsequent purging of the welding zone with safety gas after the arc goes out, because the red-hot weld pool is still exposed to the harmful effects of atmospheric air for some time. By default, the post-purge time [t.Po] is set to 1.5 seconds, which can be changed at any time at your discretion. To change the value of any function in the current welding mode, see section 6.1. You can use the left source indicator and the right wire feeder indicator.

5.6 VOLTAGE/SPEED RAMP FUNCTION AT THE START OF WELDING

This function is required for a smooth weld entry time [t.uP], which reduces splashing of the weld pool and spattering when the wire is still cold at ignition. The extended soft-entry time is used for the initial formation of the weld pool.

WARNING! The longer the ramp up time, the lower the initial weld penetration. That is why it is only used for medium and long welds. For this reason, do not increase the time more than 0.1 sec when tack welding, etc.

By default, the entry time is set to "OFF ", i.e. it is disabled. To change the value of any function in the current welding mode, see section 6.1.

WARNING! When welding steel wire, the ramp up time [t.uP] at the source should be either equal to or slightly less than the wire feeder. When welding aluminum wire, the ramp up time [t.uP] at the source should be greater (+0.2...+0.5 seconds) than at the wire feeder.

5.7 END-OF-WELDING VOLTAGE/SPEED DECAY FUNCTION

This function is designed for the smooth welding of a crater formed in the weld pool by the electromagnetic arc, which is then a source of defects in the weld seam. The signal to start the function is to release the button on the torch at the end of the welding process. The torch must be stopped and the dimple (that is the crater) in the weld must be welded with decreasing voltage.

By default, both are set to 0.1 sec, i.e. actually in off state. This value can be changed at your own discretion, see section 6.1 for the procedure.

WARNING! When welding steel wire, the decay time [t.dn] at the source should be either equal to or slightly greater than the wire feeder. When welding aluminum wire, the decay time [t.dn] at the source should be less (-0.3...-0.7 sec.) than at the wire feeder.

5.8 PULSED VOLTAGE WELDING FUNCTION

This function is designed to facilitate the control of the welding process in spatial positions other than bottom and in the welding of non-ferrous metals. The effect is directed to the mixing of the molten weld metal and to the drip transfer into the weld pool, and this in turn affects the stability of the weld formation and the welding process. In other words, this process to some extent replaces the movements of the welder's hand, which is especially important in hard-to-reach places. The shape and quality of the weld formation depends on the correct setting, which reduces the likelihood of pores and reduces the granularity of the structure, and this increases the strength of the weld.

To implement this function, three parameters must be set in the unit: pulsing power [Po.P], pulsing frequency [Fr.P] and pulse/pause ratio (or "duty ratio") [dut]. By default, the pulsing power as a key parameter is in "OFF" position, i.e. the function is disabled, and the pulsing frequency and "duty ratio" are at the most common values of 20 Hz and 50% respectively. To enable the function, it is sufficient to set the pulsing power greater than zero. This parameter is set as a percentage of the main welding current set.

Example: When welding with 0.8 mm wire, with a wire feed speed set to 5.5 m/min, main welding voltage set to 18V and pulsing power set to 20%, with a pulse frequency of 20 Hz and a "duty ratio" of 50% by default.

Result: The current will pulse from 14.4V to 21.6V with a frequency of 20 Hz. The pulses will have the same shape in amplitude and time.

The "duty ratio" parameter is set to 50% by default. If you change this parameter from 50%, the asymmetry between the current pulse time and the current "pause" time is entered:

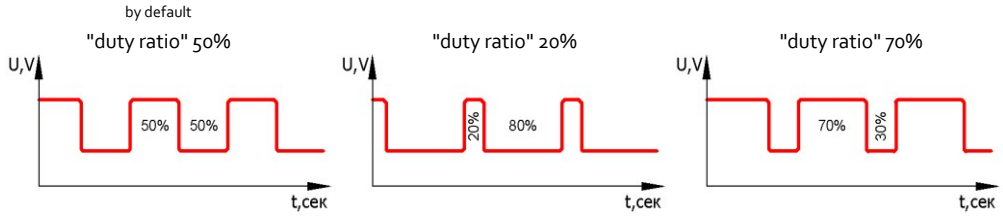

The machine will calculate that while maintaining the set pulse difference, the average welding current will be maintained at the main welding current of 18V (as

set), respectively the heat input to the weld will be the same as 18V, but the stability of the welding process, the mixing of the weld pool and weld penetration will change. This is a very important condition for the user to accurately estimate the amount of change in weld pool's heat input, for example: by comparing it to another main current without pulse mode.

If the task is to reduce the heat input to the weld using pulse mode, e.g. when welding thin metals, then it is necessary to reduce, in a standard way, the main source voltage, while the pulse amplitude and pauses set earlier will automatically adjust to this voltage. Therefore the user will clearly understand how much the current heat input to the weld is reduced compared to the previous mode, while changing in any combination the pulse power and "duty ratio" to obtain the desired process. This task is not simple, because several parameters are regulated at once.

These parameters are set differently in each situation, according to the welder's requirements. To change the value of any function in the current welding mode, see section 6.1.

5.9 MOTOR SWITCH-OFF FUNCTION

This optional feature to turn off motor operation may not be present in the wire feeder menu, because when there is communication between the control units, the machine itself decides whether to turn the motor on and off in a particular welding mode.

WARNING! This parameter must be in the "ON" position for proper operation of the semi-automatic machine.

6. SELECTING AND CONFIGURING MACHINE FUNCTIONS

If you do not press any buttons on the front panel, the machine displays the value of the main parameter of the current welding mode on the digital display on the left side:

1) In the MMA mode – welding current; 2)
In the TIG mode – welding current;
3) In the MIG/MAG mode – welding voltage.

During MIG/MAG welding, the left indicator shows the actual current value resulting from the following factors: the wire diameter used, the voltage set at the

source, the wire feed speed set on the wire feeder, the gas used, the material and thickness of the piece being welded, etc. The value is displayed for 8 seconds after welding is finished, so that the welder can double-check it without assistance. And the digital display on the right side in the same MIG/MAG mode shows the wire feed speed in m/min.

Button 3 on the front panel of the machine is used to select the source function in the current welding mode, and button **9** is used to select the function of the feeder in MIG/MAG mode. This will be discussed in paragraph 6.1.

Button **4** on the front panel of the machine is used to select the welding mode. This will be discussed in paragraph 6.2.

Buttons **2** on the front panel of the source are used to change the current value on the digital display on the left side.

Buttons **11** on the front panel of the feeder are used to change the current value on the digital display on the right side.

6.1 SWITCHING TO THE DESIRED FUNCTION

If the unit has a tamper-proof function menu system, no change occurs on the digital display when you press button **3** on the source, i.e. the button is locked. To unlock it, you must hold it down for more than 3.5 seconds. When unlocked, the display shows the opening locks indicating that the function menu has been unlocked. After successful unlocking, pressing button **3** will display the current function name and its value on the digital display.

Warning! After releasing button **3** in 2 seconds, the screen will switch back to the main parameter of the current welding mode. While the display shows the current function, its value can be changed up or down, using the buttons **2**. Or by quickly pressing and releasing button **3** you can switch to the next function in a circle.

Warning! If you hold down button **3** for more than 10 seconds, the display will show a countdown 333...222...111... You must release the button before this time expires in order not to reset all settings of this mode to the standard factory settings. This task will be considered in paragraph 6.3.

Similarly, when button **9** is pressed, the digital display on the right shows the graphic name of the current function of the wire feeder, and immediately after releasing it for 2 seconds, the current value of that function is shown. The buttons **11** can be used to change it up or down.

If the menu is locked, as in the case of the function menu on the source, just hold down this button for more than 3.5 seconds.

6.2 SWITCHING TO THE DESIRED WELDING MODE

Press button **4** to select the desired welding mode. The modes are switched in a circle. This can be seen on the digital display.

6.3 RESETTING ALL FUNCTIONS OF THE CURRENT WELDING MODE

There may be situations where the settings in the unit are somewhat confusing to the user. In order to reset the settings to the factory default values, it is necessary to use the same button **3**, which is used to enter the function menu. To reset the settings, it is simply enough to hold the button **3** for more than 10 seconds (do not pay attention to the locks displayed). The display will start counting down 333...222...111 and when "000" is reached, all settings of the current welding mode will be reset to the factory settings. The parameters for each welding mode are reset separately. This is done for convenience not to reset the individual settings in the other two modes.

Similarly, you can reset the settings on the wire feeder with the button **9**.

6.4 CHANGING THE PROGRAM NUMBER IN THE CURRENT WELDING MODE

Each MMA, TIG and MIG/MAG welding mode allows the user to store up to 16 different settings. The current setup number (program) is displayed in the upper right corner of the display on the front of the source. When the machine is first turned on, the program is always No. 1 for each welding mode. All changes to the machine settings in a given weld mode and the current program number are saved.

To switch to another program number and start setting again from the basic parameters, it is necessary to press button 3 and if the function selection menu is not locked, then the display will show the current program number, which can be changed up or down using buttons 2. If the function selection menu is not locked, for example: the user has just before that changed the additional function parameters described in paragraph 6.1, it is necessary to lock the function selection menu by holding down button 3 for more than 3.5 seconds, in the same way as when unlocking. The indicator will show the closing locks. After this operation is over, the menu will be locked and now you can try to change the program number again by

using button 3. In this case, all the parameters of the previous program will be saved and you can always return to it again.

7. GENERAL LIST AND SEQUENCE OF FUNCTIONS

MMA welding mode

0) Main displayable parameter CURRENT= 90A (default)
   a) 12 ... 250A (unit increment 1A) for MultiPRO-250
   b) 12 ... 270A (unit increment 1A) for MultiPRO-270-400V
1) Hot Start power = 40% (default)
   a) 0[OFF] ... 100% (unit increment 1%)
2) Hot Start time = 0.3 sec (default)
   a) 0.1 ... 1.0 sec (unit increment 0.1 sec)
3) Arc Force power = 40% (default)
   a) 0[OFF] ... 100% (unit increment 1%) 4) Arc Force triggering level = 12V (default) a) 9 ... 18V (unit increment 1V)
5) Voltage response slope = 1.4V/A (default)
   a) 0.2 ... 1.8V/A (unit increment 0.4V/A) 6)
Short arc welding = OFF (default)
a) ON – enabled
b) OFF – disabled
7) Voltage reduction unit = OFF (default)
   a) ON – enabled
   b) OFF – disabled
8) Current pulsation power = OFF (default)
   a) 0[OFF] ... 80% (unit increment 1%)
9) Current pulsation frequency = 5.0 Hz (default)
   a) 0.2 ... 500 Hz (dynamic unit increment 0.1 Hz ... 1 Hz)
10) The pulse/pause ratio (duty ratio) is the percentage of the larger current pulse to the period of these pulses = 50% (default)
   a) 20 ... 80% (unit increment 1%)

TIG welding mode

0) Main displayable parameter CURRENT = 100A (default)

a) 12 ... 250A (unit increment 1A) for MultiPRO-250
b) 12 ... 270A (unit increment 1A) for MultiPRO-270-400V

1) Torch button mode = [2T] (default)
a) [LIFT] – TIG-LIFT contact ignition mode
b) [2T] – contactless ignition mode, TIG-2T button mode
c) [4T] – contactless ignition mode, TIG-4T button mode

2) Pre-purge time = 0.1 sec (default)
a) 0.1 ... 25.0 sec (unit increment 0.1 sec)

3) Gas post-purge time = 1.5 sec (default)
a) 0.1 ... 25.0 sec (unit increment 0.1 sec) 4) Pre-current (pilot arc) = 20A (default) a) 12 ... 50A (unit increment 1A) 5) Crater welding current = 20A (default) a) 12 ... 50A (unit increment 1A) 6) Current ramp up time = OFF (default)
a) o[OFF]...15.0 sec (unit increment 0.1 sec)

7) Current decay time = OFF (default)
a) o[OFF] ...15.0 sec (unit increment 0.1 sec)

8) Current pulsation power = OFF (default)
a) o[OFF] ... 80% (unit increment 1%)

9) Current pulsation frequency = 10.0 Hz (default)
a) 0.2 ... 500.0 Hz (dynamic unit increment 0.1 Hz ... 1 Hz)

10) The pulse/pause ratio (duty ratio) is the percentage of the larger current pulse to the period of these pulses = 50% (default)
a) 20 ... 80% (unit increment 1%)

MIG/MAG welding mode

On the left source display:

0) Main displayable parameter VOLTAGE = 19.0 V (default)
a) 12.0 ... 28.0 V (unit increment 0.1 V) for MultiPRO-250
b) 12.0 ... 29.0 V (unit increment 0.1 V) for MultiPRO-270-400V

1) Torch button mode = [2T] (default)
a) [2T] – button mode on the 2T torch
b) [4T] – standard button mode on 4T torch
c) [alt.4T] – alternative button mode on 4T torch

2) Inductance = OFF (default)

a) 0 [OFF] ... 3 steps (unit increment 1 step) 3) Pre-purge time with safety gas = 0.1 sec (default) a) 0.1 ... 25.0 sec (unit increment 0.1 sec) 4) Post-purge time with safety gas = 0.1 sec (default) a) 0.1 ... 25.0 sec (unit increment 0.1 sec)

5) Voltage ramp up time = OFF (default)
   a) 0 [OFF] ... 5.0 sec (unit increment 0.1 sec)
6) Voltage decay time = 0.1 sec (default)
   a) 0.1 ... 5.0 sec (unit increment 0.1 sec)
7) Voltage pulsation power = OFF (default)
   a) 0[OFF] ... 80% (unit increment 1%)
8) Voltage pulsation frequency = 20 Hz (default) a) 5 ... 500 Hz (unit increment 1 Hz)
9) The pulse/pause ratio (duty ratio) is the percentage of the larger current pulse to the period of these pulses = 50% (default)
   a) 20 ... 80% (unit increment 1%)

On the right wire feeder display:

0) Main displayable parameter Rate feed = 7.0 m/min (default) a) 2.0 ... 16.0 m/min (unit increment 0.1 m/min)
1) Torch button mode = [2T] (default)
   a) [2T] – button mode on the 2T torch
   b) [4T] – standard button mode on 4T torch
   c) [alt.4T] – alternative button mode on 4T torch
2) Wire feed motor on/off = ON (default)
   a) ON – enabled
   b) OFF – disabled
3) Pre-purge time with safety gas = 0.1 sec (default) a) 0.1 ... 25.0 sec (unit increment 0.1 sec) 4) Post-purge time with safety gas = 0.1 sec (default) a) 0.1 ... 25.0 sec (unit increment 0.1 sec)
5) Wire feeder ramp up speed = 0.1 sec (default)
   a) 0 [OFF] ... 5.0 sec (unit increment 0.1 sec)
6) Wire feeder decay speed = OFF (default)
   a) 0 [OFF] ... 5.0 sec (unit increment 0.1 sec)

8. GENERATOR OPERATION MODE

The power supply is suitable for operation on a generator under the following conditions:

When working with an electrode	Set current value for MMA and TIG	When working with a wire diameter at MIG/MAG	Generator minimum power
Ø2	max. 80A	max. Ø0.6 mm	3.0 kVA
Ø3	max.120A	max. Ø0.8 mm	4.5 kVA
Ø4	max.160A	max. Ø1.0 mm	6.0 kVA
Ø5 fusible	max.200A		7.7 kVA
Ø5	max.250A	max. Ø1.2 mm	10.0 kVA
Ø6 fusible	max.270A		12.0 kVA

For trouble-free operation! The output phase-to-phase voltage of the generator must be within the permissible limits:

- 160-260 V (for MultiPRO-250 model);
- 320-440 V for all three phases (for MultiPRO-270-400V model).

9. SERVICE AND MAINTENANCE

Warning! Before opening the machine, switch it off and disconnect the mains plug. Allow the internal circuits of the machine to discharge (approx. 5 min.) before proceeding. Place a sign prohibiting switching on when leaving.

To keep the machine in good working condition for many years, several rules must be observed:

- Perform safety inspections at specified intervals (see Section "Safety Instructions");

- In the case of intensive use, we recommend blowing out the machine with dry compressed air once every six months. **Warning!** Blowing from a too-short distance can damage the electronic components;
- If there is a large accumulation of dust, clean the cooling ducts manually.

10. STORAGE REGULATIONS

Preserved and packed source should be kept in storage conditions 4 of State Standard 15150-69 for 5 years.

Unpacked source should be stored in a dry closed room at air temperature not lower than +5 °C. There should be no vapors of acids and other active substances on the premises.

11. TRANSPORTATION

Packed source can be transported by all means ensuring its safety in compliance with the rules of transportation established for the relevant type of transport.

12. SCOPE OF DELIVERY

1.	Welding arc power source with power cord	– 1 pc;
2.	Wire feeder	– 1 pc;
3.	Strap for attaching the source to the wire feeder	– 1 pc;
4.	Rollers for steel wire (0.8-1.0; 1.2-1.6)	– 1 set;
5.	Roller for aluminum wire (0.8-1.0)	– 1 set;
6.	Cable with ABICOR BINZEL electrode holder 3m	– 1 pc;
7.	ABICOR BINZEL argon arc torch 4m	– 1 pc;
8.	ABICOR BINZEL semi-automatic torch 3m	– 1 pc;
9.	ABICOR BINZEL welding cable with ground terminal 3m	– 1 pc;
10.	Pneumatic quick connector	– 1 pc;
11.	Operation manual	– 1 pc;
12.	PATON branded corrugated box	– 1 pc.

13. SAFETY INSTRUCTIONS

GENERAL PROVISIONS

The welding machine is manufactured following technical standards and established safety regulations. Nevertheless, if handled improperly, there is a risk of:

- Injury to operating personnel or a third party;
- Damage to the machine or material assets in the workplace; - Disruption of an efficient work process.

All persons involved in the commissioning, operating, maintenance and servicing of the machine must:

- Take appropriate certification;
- Possess knowledge of welding;
- Adhere strictly to these instructions.

Faults that could impair safety must be eliminated immediately.

USER OBLIGATIONS

The user is obliged to allow only those persons to work on the machine who:

- Are familiar with the basic safety instructions and have been trained in the use of the welding equipment;
- Have read the "Safety instructions" section and the safety precautions in this manual and confirm this with their signature.

PERSONAL PROTECTIVE EQUIPMENT

Observe the following rules for personal protection:

-Wear sturdy shoes that retain their insulating properties, including in wet conditions;

-Protect your hands with insulating gloves;

-Protect your eyes with a protective mask with a UV filter that meets safety standards;

-Use appropriate inflammable clothing.

HAZARD OF HARMFUL GASES AND VAPORS

- Remove any smoke and harmful gases from the workspace using special means;
- Ensure an adequate supply of fresh air;
- Solvent vapors must not enter the radiation zone of the welding arc.

SPARKING HAZARD

- Flammable objects must be removed from the workspace;
- Welding work is not allowed on containers storing or having stored gases, fuels, petroleum products. There may be a risk of explosion of residues of these products;
- Special rules according to national and international regulations must be observed in fire and explosion hazardous area.

HAZARD OF MAINS AND WELDING CURRENTS

- Electrical shock can be fatal;
- Magnetic fields generated by high currents can have a negative effect on the function of electrical devices (e.g. pacemakers). Persons wearing such devices should consult a physician before approaching the welding site;
- Welding cable must be strong, undamaged and insulated. Loose connections and damaged cables must be replaced immediately. All mains and welding machine cables should be checked regularly for correct insulation by an electrician;
- The outer cover of the machine must not be removed during operation.

INFORMAL SAFETY PRECAUTIONS

- Keep the manual close to the place of use of the welding machine at all times;
- In addition to the instructions, comply with the general and local safety and environmental regulations in force;
- Keep all the instructions on the welding machine in a legible condition.

STRAY WELDING CURRENTS

- Make sure that the ground cable is firmly connected to the piece;
- If possible, do not place the welding machine directly on the conductive surface of the floor or work table. Use insulating pads.

COMMON PRECAUTIONS

Check the machine at least once a week for external damage and operation of the safety devices.

PATON MultiPRO-

DC MMA/TIG/MIG/MAG source circuit diagram

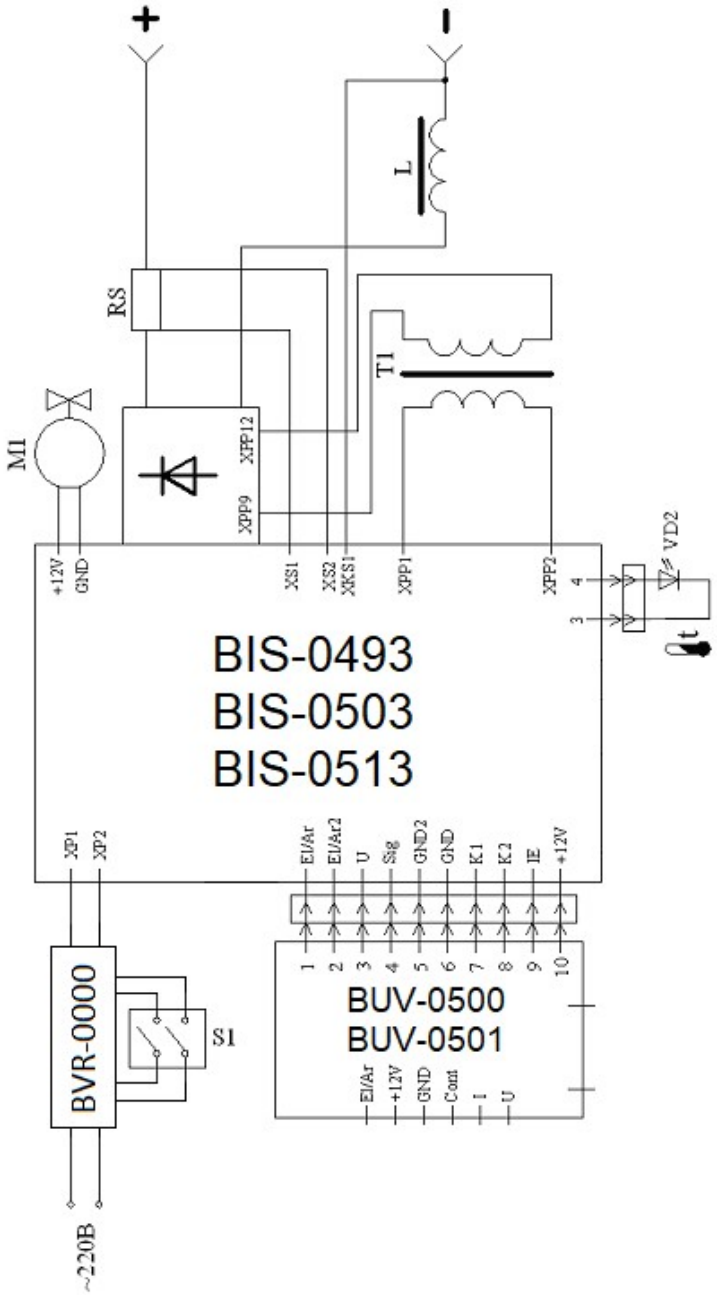

PATON MultiPRO-270- V DC MMA/TIG/MIG/MAG source circuit diagram

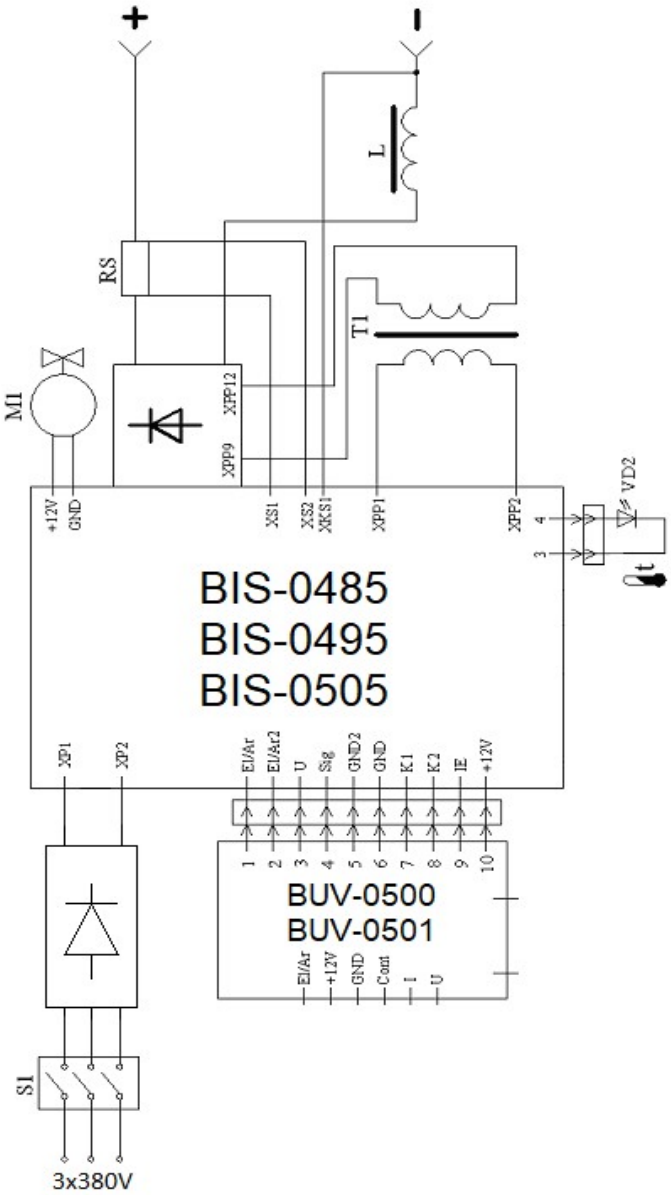

14. WARRANTY OBLIGATIONS

PATON INTERNATIONAL warrants that the source will operate properly if the user follows the operating, storage and transportation conditions.

WARNING! There is no free warranty service if the welding machine is mechanically damaged!

Machine model	Warranty period
MultiPRO-250	**3 years**
MultiPRO-270-400V	

The main warranty period is calculated from the date of sale of the inverter equipment to the end customer.

During the main warranty period, the seller undertakes, at no charge to the owner of the PATON inverter equipment:

- To make a diagnostic and identify the cause of the breakdown,
- To provide the units and elements necessary for repair, - To replace defective components and units, - To test the repaired equipment.

The main warranty does not cover the equipment:

- With mechanical damage that affects the performance of the equipment (deformation of the housing and parts as a result of falling from a height or falling of heavy objects on the equipment, falling out of the buttons and connectors),
- With traces of corrosion, which caused the defective condition,
- Failed due to exposure of its power and electronic components to excessive moisture,
- Failed due to accumulation of conductive dust inside (coal dust, metal chips, etc.), - In the case of an unauthorized attempt to repair its components and/or replace the electronic elements,
- Depending on the operating conditions, it is recommended to remove the protective cover and clean the internal elements and units with compressed air once every six months to avoid the failure of the device. Cleaning should be carried out carefully, keeping the compressor hose at a sufficient distance to avoid damaging the soldered electronic components and mechanical parts.

The main warranty also does not cover damaged external parts of the equipment that are subject to physical contact and accessories/consumables, which must be claimed within two weeks of the date of sale:

- On and off button,
- Welding parameter control knob,
- Cable and hose connectors,

- Control connectors,
- Power cord and power cord plug,
- Carrying handle, shoulder strap, case, box,
- Electrode holder, ground clamp, torch, welding cables and hoses.

In the event of warranty service, the customer must ship the welder at his own expense. The seller reserves the right to refuse to provide warranty repairs, or set the month and year of manufacture of the device (determined by the serial number) as the date of the warranty obligations beginning:

- In case of loss of the certificate by the owner,
- In the absence of correct or any filling of the certificate by the seller when selling the machine,
- The warranty period is extended for the period of warranty service in the service center.